EMC1102

SST Compliant Hardware Monitor with Two Temperature Channels

PRODUCT FEATURES

Data Brief

General Description

The EMC1102 is a one-wire sensor that is capable of monitoring up to two temperature zones for an Intel PC platform containing an SST host. The two temperature zones consist of an internal temperature diode and an externally connected temperature diode. In cooperation with a host device, thermal management and fan control can be performed. Communication takes place over a one-wire SST based interface. The internal 11-bit delta-sigma ADC architecture provides superb linearity, high accuracy, and excellent noise immunity.

Applications

- Desktop PCs, Servers and Workstations

Features

- Single Wire Interface (SST based)
  - SST 1.0 compliant
  - Fixed Address, Discoverable Device
  - Nine programmable addresses
  - Supports FCS Abort functionality not available in SST 0.9 compliant devices
- Resistance Error Correction
- Ideality Configuration
- Beta Compensation
- External Temperature Monitor
  - 0.125°C resolution
  - ±1°C Accuracy (50°C to 70°C)
  - Diode Fault Reporting
- Internal Temperature Monitor
  - Range -40°C to +125°C
  - 0.125°C resolution
  - ±2°C Accuracy (40°C to 70°C)
- Supply
  - 3.0V to 3.6V

Simplified Block Diagram

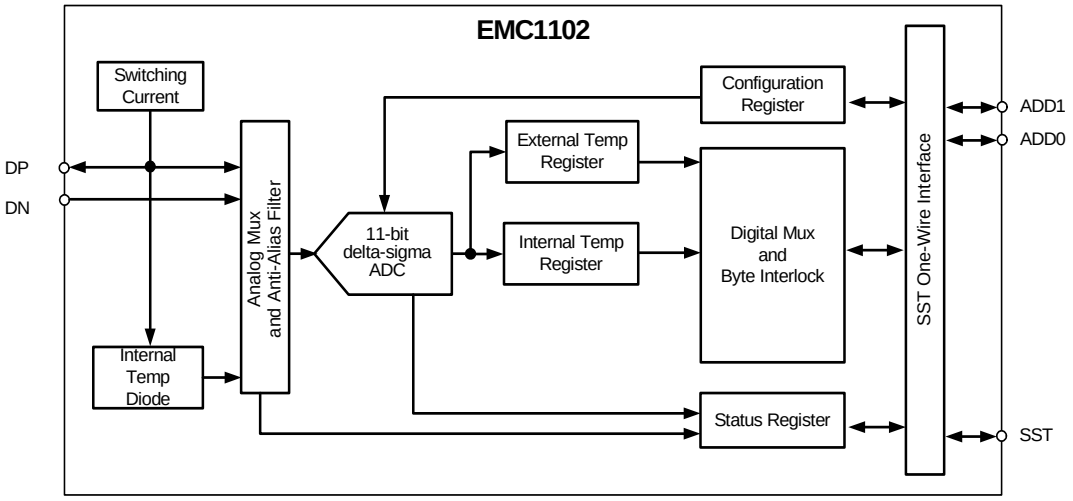

ORDER NUMBER(S):

PART NUMBER	FEATURES	PACKAGE
EMC1102-ACZL-TR	External Diode configured to monitor 65nm CPU	8 pin MSOP Lead-Free, ROHS Compliant

80 ARKAY DRIVE, HAUPPAUGE, NY 11788 (631) 435-6000, FAX (631) 273-3123

Copyright © 2008 SMSC or its subsidiaries. All rights reserved.

Circuit diagrams and other information relating to SMSC products are included as a means of illustrating typical applications. Consequently, complete information sufficient for construction purposes is not necessarily given. Although the information has been checked and is believed to be accurate, no responsibility is assumed for inaccuracies. SMSC reserves the right to make changes to specifications and product descriptions at any time without notice. Contact your local SMSC sales office to obtain the latest specifications before placing your product order. The provision of this information does not convey to the purchaser of the described semiconductor devices any licenses under any patent rights or other intellectual property rights of SMSC or others. All sales are expressly conditional on your agreement to the terms and conditions of the most recently dated version of SMSC's standard Terms of Sale Agreement dated before the date of your order (the "Terms of Sale Agreement"). The product may contain design defects or errors known as anomalies which may cause the product's functions to deviate from published specifications. Anomaly sheets are available upon request. SMSC products are not designed, intended, authorized or warranted for use in any life support or other application where product failure could cause or contribute to personal injury or severe property damage. Any and all such uses without prior written approval of an Officer of SMSC and further testing and/or modification will be fully at the risk of the customer. Copies of this document or other SMSC literature, as well as the Terms of Sale Agreement, may be obtained by visiting SMSC's website at http://www.smsc.com. SMSC is a registered trademark of Standard Microsystems Corporation ("SMSC"). Product names and company names are the trademarks of their respective holders.

SMSC DISCLAIMS AND EXCLUDES ANY AND ALL WARRANTIES, INCLUDING WITHOUT LIMITATION ANY AND ALL IMPLIED WARRANTIES OF MERCHANTABILITY, FITNESS FOR A PARTICULAR PURPOSE, TITLE, AND AGAINST INFRINGEMENT AND THE LIKE, AND ANY AND ALL WARRANTIES ARISING FROM ANY COURSE OF DEALING OR USAGE OF TRADE. IN NO EVENT SHALL SMSC BE LIABLE FOR ANY DIRECT, INCIDENTAL, INDIRECT, SPECIAL, PUNITIVE, OR CONSEQUENTIAL DAMAGES; OR FOR LOST DATA, PROFITS, SAVINGS OR REVENUES OF ANY KIND; REGARDLESS OF THE FORM OF ACTION, WHETHER BASED ON CONTRACT; TORT; NEGLIGENCE OF SMSC OR OTHERS; STRICT LIABILITY; BREACH OF WARRANTY; OR OTHERWISE; WHETHER OR NOT ANY REMEDY OF BUYER IS HELD TO HAVE FAILED OF ITS ESSENTIAL PURPOSE, AND WHETHER OR NOT SMSC HAS BEEN ADVISED OF THE POSSIBILITY OF SUCH DAMAGES.

Package Outline

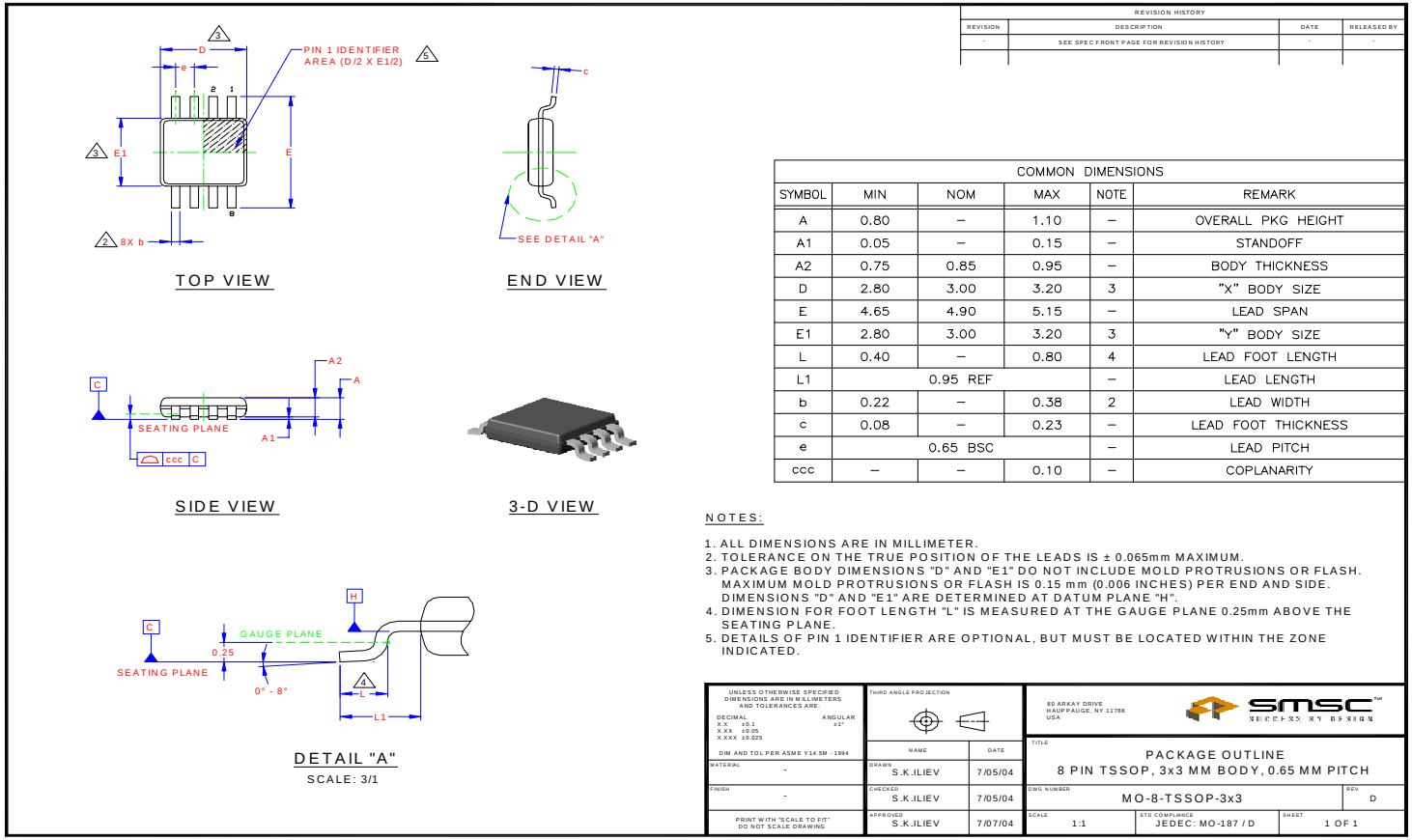

COMMON DIMENSIONS					
SYMBOL	MIN	NOM	MAX	NOTE	REMARK
A	0.80	–	1.10	–	OVERALL PKG HEIGHT
A1	0.05	–	0.15	–	STANDOFF
A2	0.75	0.85	0.95	–	BODY THICKNESS
D	2.80	3.00	3.20	3	"X" BODY SIZE
E	4.65	4.90	5.15	–	LEAD SPAN
E1	2.80	3.00	3.20	3	"Y" BODY SIZE
L	0.40	–	0.80	4	LEAD FOOT LENGTH
L1		0.95 REF		–	LEAD LENGTH
b	0.22	–	0.38	2	LEAD WIDTH
c	0.08	–	0.23	–	LEAD FOOT THICKNESS
e		0.65 BSC		–	LEAD PITCH
ccc	–	–	0.10	–	COPLANARITY

NOTES:

1. ALL DIMENSIONS ARE IN MILLIMETER.
2. TOLERANCE ON THE TRUE POSITION OF THE LEADS IS ± 0.065mm MAXIMUM.
3. PACKAGE BODY DIMENSIONS "D" AND "E1" DO NOT INCLUDE MOLD PROTRUSIONS OR FLASH. MAXIMUM MOLD PROTRUSIONS OR FLASH IS 0.15 mm (0.006 INCHES) PER END AND SIDE. DIMENSIONS "D" AND "E1" ARE DETERMINED AT DATUM PLANE "H".
4. DIMENSION FOR FOOT LENGTH "L" IS MEASURED AT THE GAUGE PLANE 0.25mm ABOVE THE SEATING PLANE.
5. DETAILS OF PIN 1 IDENTIFIER ARE OPTIONAL, BUT MUST BE LOCATED WITHIN THE ZONE INDICATED.

Figure 1 EMC1102 8-Pin MSOP Package Drawing